Technical datas

Nominal resistance	100 Ω at 0°C
Resistance basic values	for measuring resistance with basic material Platinum acc. DIN IEC 751 Kl.B
Measuring range	-50°C to + 250°C
Circuit	Standard: 2-wire optional 3- or 4-wire connection
Dielectric strength	2,5 kV
Connecting lead	AWG24, Teflon-wire Standard colour: red/white optional: stranded
Insulation class	H (Standard)

Special executions possible.
PT-500, PT-1000 and other executions available on request.

Dimensions (data in mm)

Executions of insulation:

Heat shrink tube | Polymerceramic | Stainless steel housing

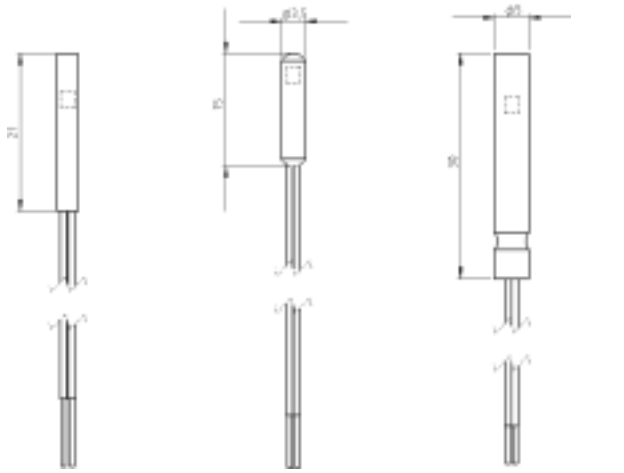

Standard lead: Cu-wires, silver-plated, teflon insulated AWG 24
Standard colour: red/white
Standard length: 500 mm

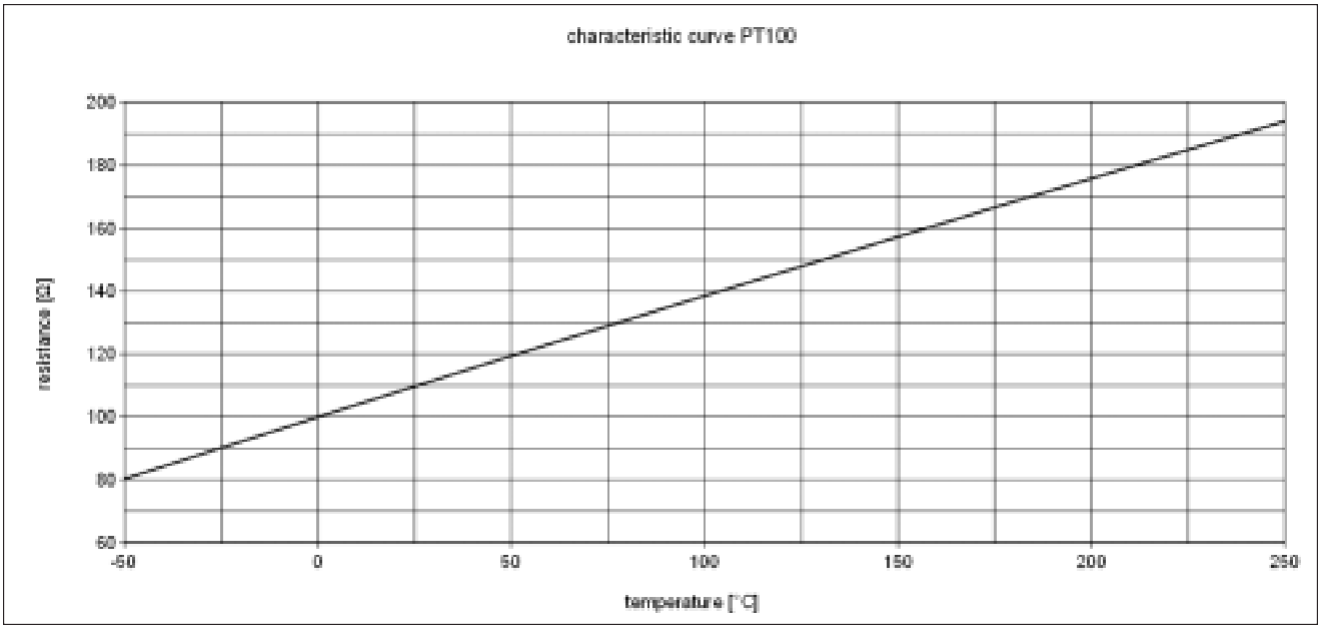

Resistance table

temperature [°C]	resistance [Ω]
-50	80,3
-25	90,2
0	100,0
25	109,7
50	119,4
75	129,0
100	138,5
125	147,9
150	157,3
175	166,6
200	175,8
225	185,0
250	194,1

Calculation formula

t = -200°C ... 0°C

$R(t) = R_0(1+At+Bt^2+C(t-100°C)t^3))$

t = 0°C ... 850°C

$R(t) = R_0(1+At+Bt^2)$

whereby $A=3{,}9083*10^{-3}\,°C^{-1}$, $B=-5{,}775*10^{-7}\,°C^{-2}$ and $C=-4{,}183*10^{-12}\,°C^{-4}$

Sample for ordering

PT100-2-500/500

- lead length L2 *(500 mm)*,
- lead length L1 *(500 mm)*
- 2-wire connection
- Type

We reserve the right to modify specification and dimensions. Regarding the information of this brochure there can't lay claim of liability or to acceptance guarantee.